[machine model]: ipad mini1

[Fault phenomenon]: no charging

Charging display prompt: This cable or accessory has not been certified, so it may not work reliably with this iPad.




[Maintenance process]:

Generally, this prompt subtitle, most of them are problems with the USB chip. After the replacement, it can generally be solved. After this replacement, the subtitle is still

prompted, and the fault remains.Disassemble, connect the charging cable, test the voltage of PPVBUS_PROT, display 0V, abnormal, PPVBUS_PROT voltage is the voltage generated from charging connector through L5700Inductor through Q5700 conduction, power off the ground diode value, found short circuit to ground.




After looking at the drawings, after a few Inductor capacitors, directly pick them up, or short-circuit to the ground, the only charging connector left, see charging connector have traces of

welding, directly removed, diode value returned to normal, replace a brand new charging connector Make up the removed parts, install the machine, charge normally, and the repair is over!

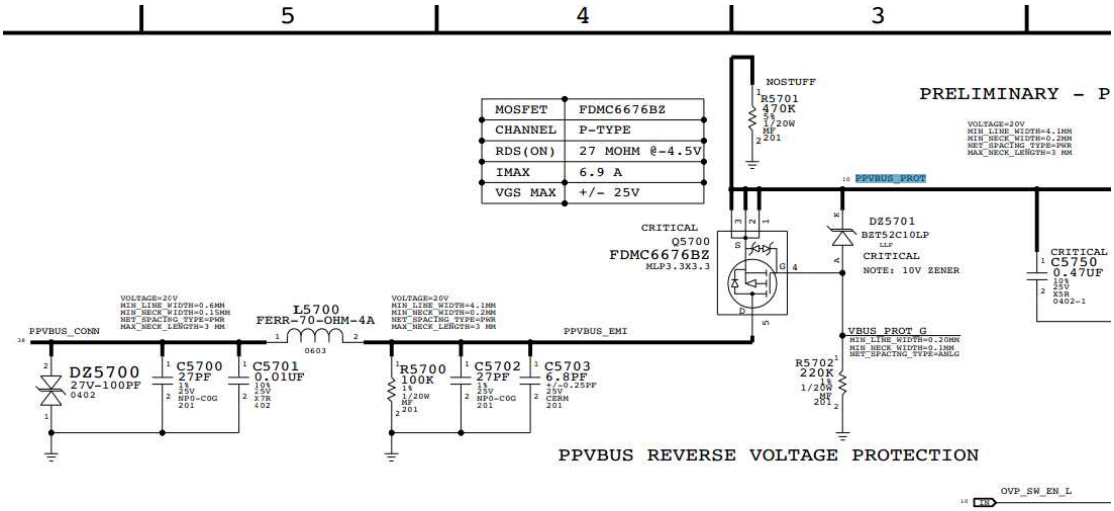


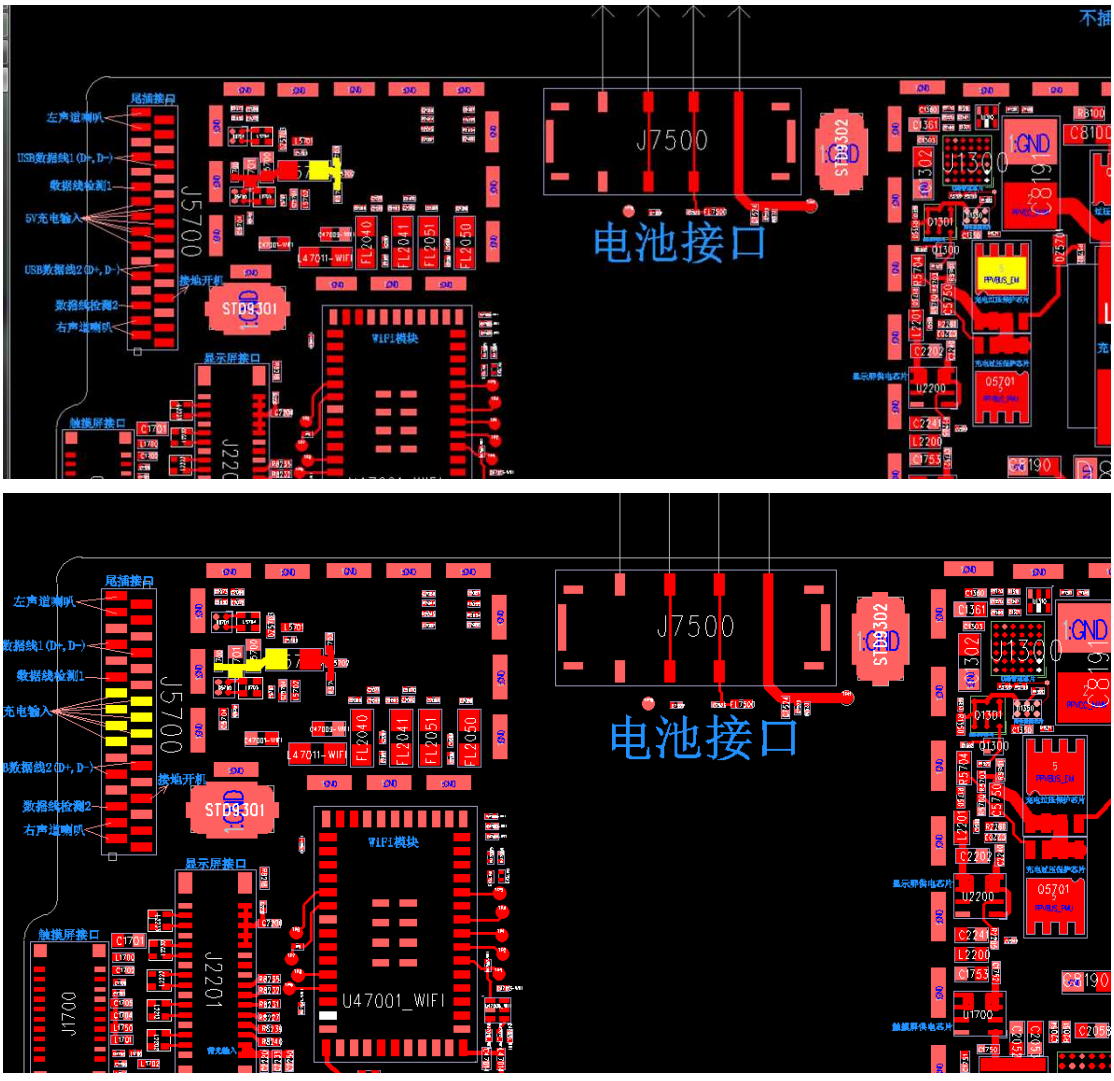

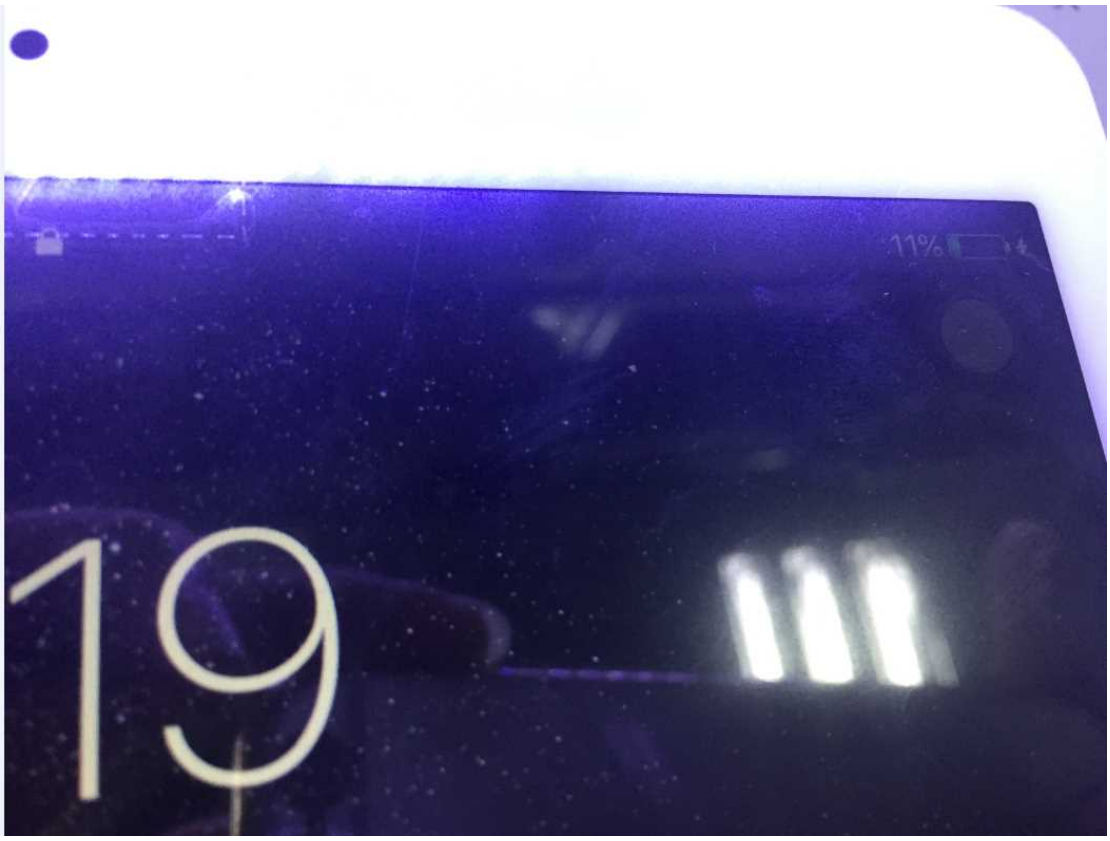
11%
19